WM-F65

SERVICE MANUAL

US Model
Canadian Model
AEP Model
E Model

RECORDING
WALKMAN

'Dolby' and the double-D symbol are the trade marks of Dolby Laboratories Licensing Corporation. Noise reduction system manufactured under license from Dolby Laboratories

SPECIFICATIONS

Tape Transport Mechanism Type	MF-WMF65-25

Radio section

Frequency range	FM: 87.6—108 MHz AM: 530—1,605 kHz
Antenna	FM: Headphone cord antenna AM: Built-in ferrite bar antenna

Tape recorder section and general

Tape track	4-track 2-channel stereo
Fast winding time	Approx. 2 min. 30 sec. with Sony C-60 cassette
Frequency response	(DOLBY NR OFF) 40—15,000 Hz (with the PB EQ selector set to METAL/CrO_2) 40—15,000 Hz (with the PB EQ selector set to NORM)
Input	External microphone input (stereo minijack) (PLUG IN POWER) sensitivity 0.2 mV (—72 dB) for low impedance microphone
Output	Headphones (stereo minijack) load impedance 8—200 ohms
Power output	8 mW + 8 mW (at 10 % harmonic distortion) at dc operation
Power requirements	3 V dc Two size AA batteries (IEC designation R6) DC IN 3 V jack accepts: optional Sony AC-D2 ac power adaptor for use on (US, Canaidan) . . . 120 V ac, 60 Hz (AEP) . . . 220 V ac, 50 Hz (E) . . . 110, 120 or 220 V ac, 50/60 Hz optional Sony EBP-500 battery case for use on two size D batteries (IEC designation R20 batteries) optional Sony DCC-70 car battery cord for use with 12 V car battery

Battery life

Batteries	FM reception	Tape playback	FM recording (headphones)	Recording (microphone)
Sony SUM-3(NS) New Super batteries	Approx. 19	Approx. 6	Approx. 4	Approx. 4
Sony Eveready AM3 alkaline batteries	Approx. 38	Approx. 12	Approx. 8	Approx. 8

(hours)

For maximum performance we recommend the use of alkaline batteries.

Dimensions	Approx. 108.9 x 84.5 x 30.4 mm (w/h/d) ($4\frac{3}{8}$ x $3\frac{3}{8}$ x $1\frac{1}{4}$ inches) not incl. projecting parts and controls Approx. 110.3 x 88 x 32 mm (w/h/d) ($4\frac{3}{8}$ x $3\frac{1}{2}$ x $1\frac{5}{16}$ inches) Incl. projecting parts and controls
Weight	Approx. 260 g (9.2 oz) Incl. batteries not incl. other accessories

MICROFILM

FM/AM STEREO CASSETTE CORDER

SONY®

TC

SERVICING NOTE

Replacing chip components

All chip components should be connected and disconnected, using a tapered soldering iron [temperature of the iron tip: less than 280°C (536°F)], a pair of tweezers and braided wire.

Precautions for replacement

1. **Do not disconnect the chip component forcefully. Otherwise, the pattern may peel off.**
2. **Never re-use a disconnected chip component. Dispose of all old chip components.**
3. **To protect the chip component, heating time for attaching the component should be within 3 seconds.**

○ Removing chip components

(1) Removing solder at electrode

Remove the solder at the electrode, using a thin braided wire. Do not remove the solder of the part (chip component) attached adjacent to the electrode.

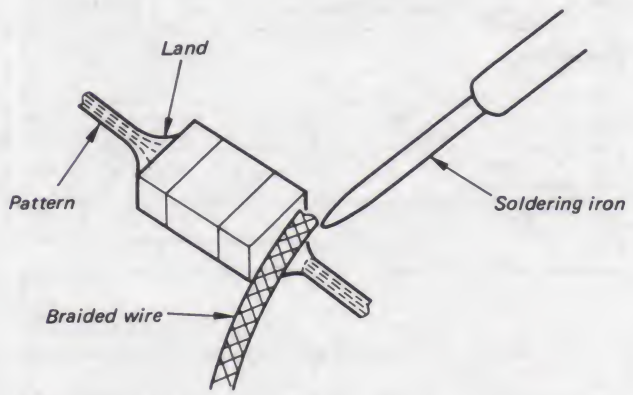

(2) Disconnecting chip components

Turn the tweezers with the soldering iron alternately applied to both electrodes, and the chip component will be disconnected. Take careful precautions while disconnecting, because if the chip component is forcefully removed the land may peel off.

Never re-use a disconnected chip component.

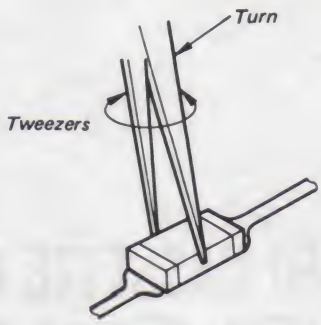

(3) Smoothing the soldered surface

After disconnecting the chip component, remove the solder by using a braided wire to smooth the land surface.

○ Connecting chip components

The value of chip components is not displayed on the main body. Take due precautions to avoid mixing new chip components with other ones.

(1) Applying solder to land on one side

Apply a thin layer of solder to the land on one side where the chip component is to be connected. Too much solder may cause bridging.

(2) Speedy soldering

Hold the chip component at the desired position, using tweezers, and apply the soldering iron in the arrow-marked direction. To protect the chip component, heating time should be within 3 seconds.

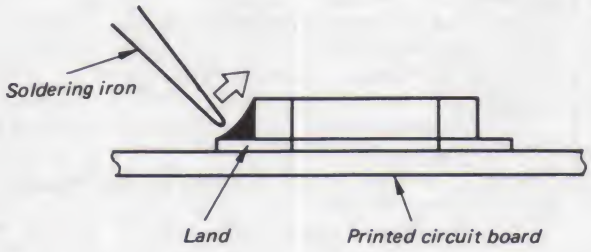

(3) Speedy soldering of electrode on the other side

Solder the electrode on the other side in the same way as in (2) above.

PARTS IDENTIFICATION

1. PAUSE switch
2. ● REC (record) button
3. TAPE/RADIO selector
4. ◀ PLAY (playback) button
5. PB EQ (playback equalizer) selector
6. ■ STOP button
7. BAND/DOLBY NR selector
8. ◀◀ (fast-forward) button
9. ▶▶ (rewind) button
10. TUNING knob
11. Dial scale
12. Cassette holder
13. FM SENS (sensitivity) selector (right side) . . . US, Canadian Model
13. FM MODE (MONO/STEREO) . . . E, AEP Model
14. ISS (interference suppress switch) (rear)
15. Battery compartment (rear)
16. DC IN 3 V (external power input) jack
17. PHONES jack (stereo minijack)
18. MIC (microphone) (PLUG IN POWER) jack (stereo minijack)
19. VOL (volume) control
20. FM STEREO indicator
21. OPR/BATT (operation/battery) indicator

SECTION 1
BLOCK DIAGRAM

BLOCK DIAGRAM

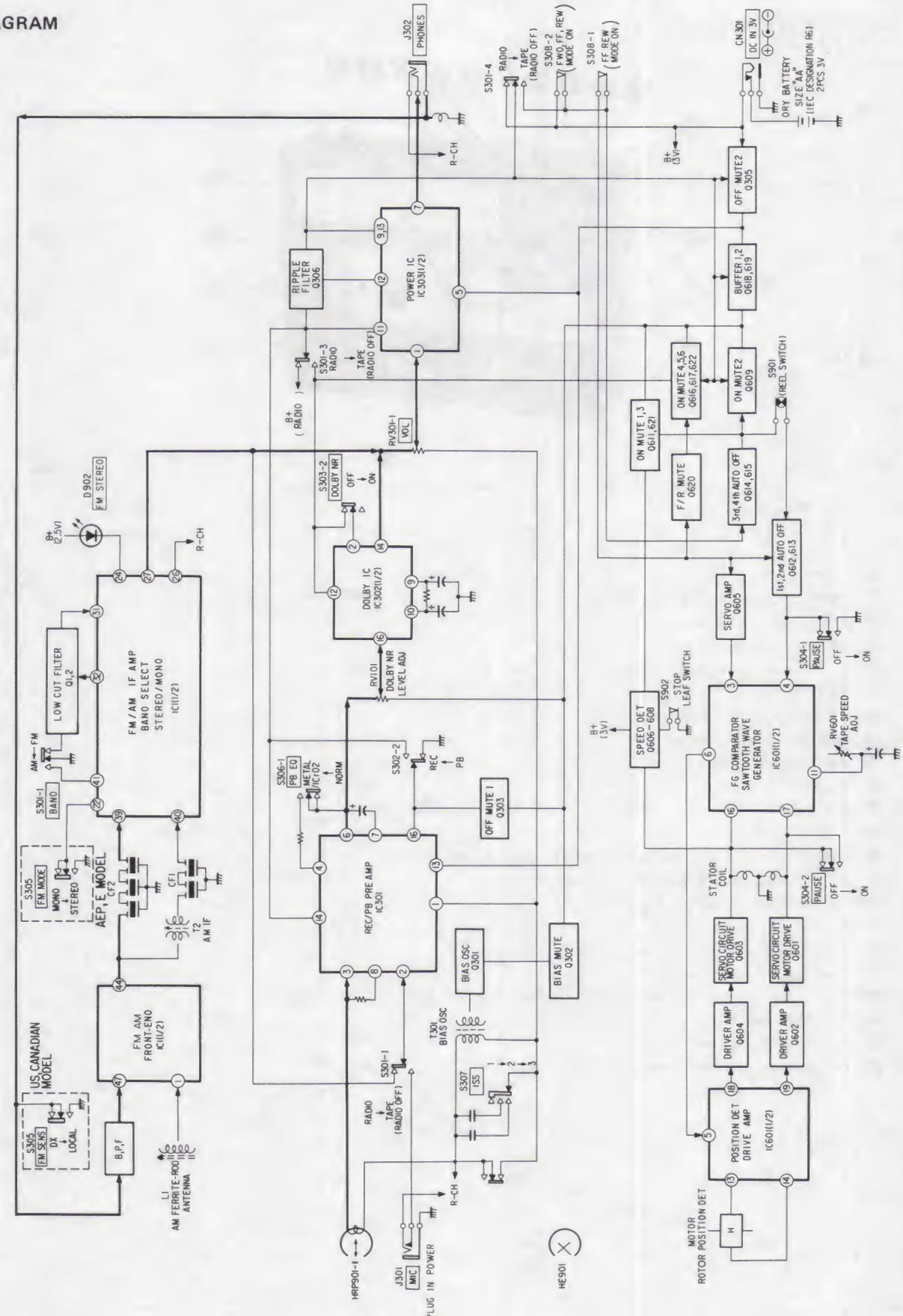

SECTION 2
DISASSEMBLY

- Follow the disassembly procedure in the numerical order given.

CABINET REMOVAL

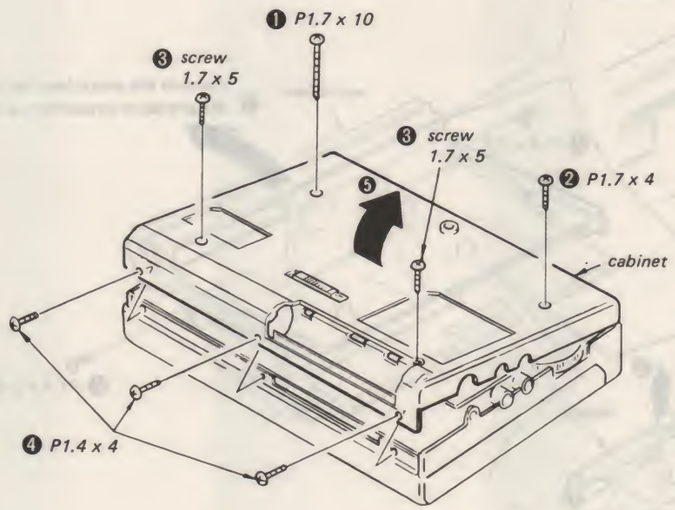

CASSETTE HOLDER REMOVAL

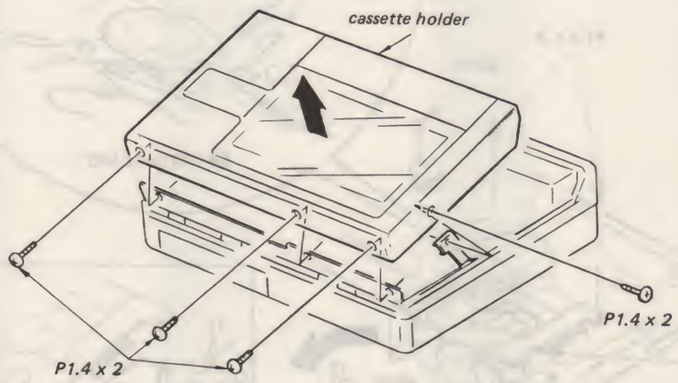

MAIN BOARD REMOVAL

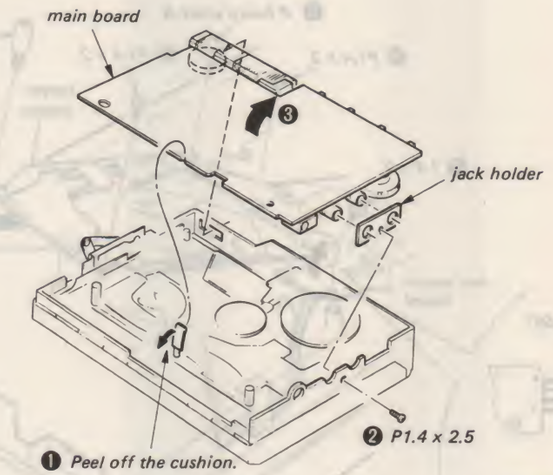

F. R LEVER REMOVAL

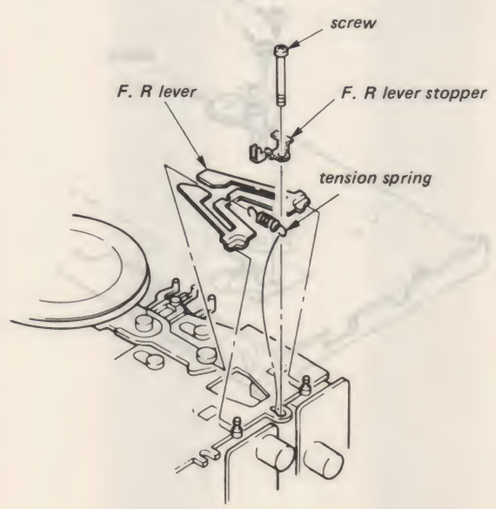

BELT REMOVAL

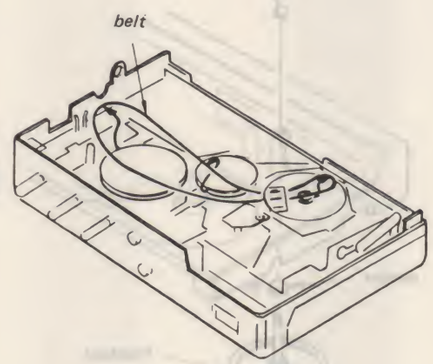

Dial Cord Stringing
(Refer to page 11.)

LEAF SW BOARD/MOTOR CHASSIS REMOVAL

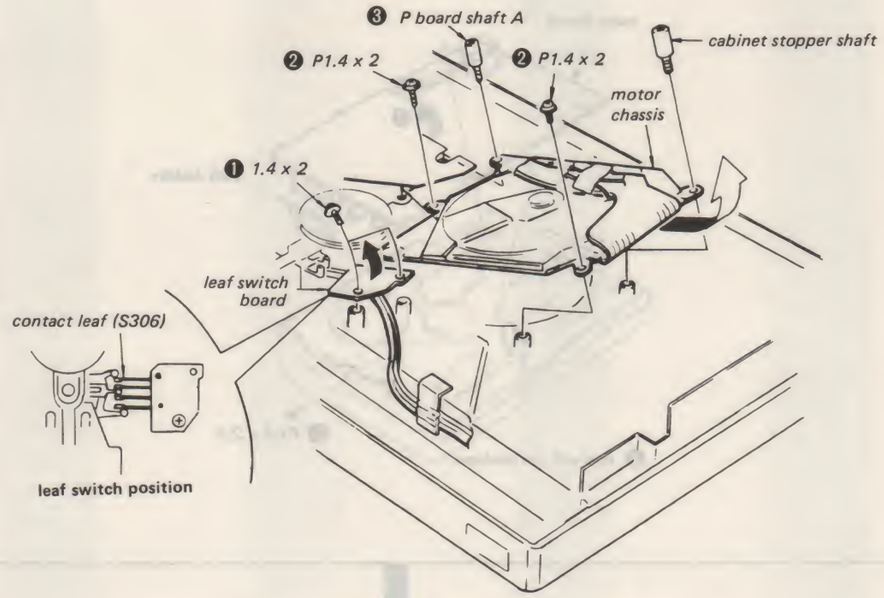

FLYWHEEL/SLEEVE REMOVAL

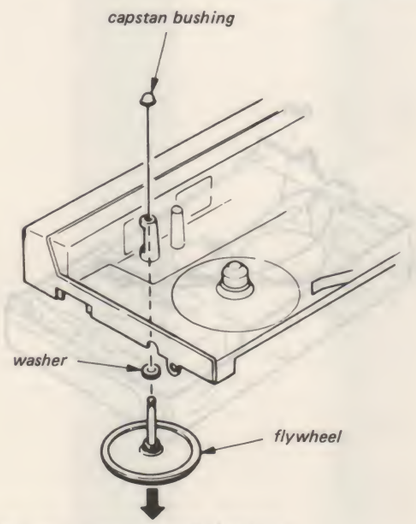

After removing the capstan bushing, be sure to use new one.

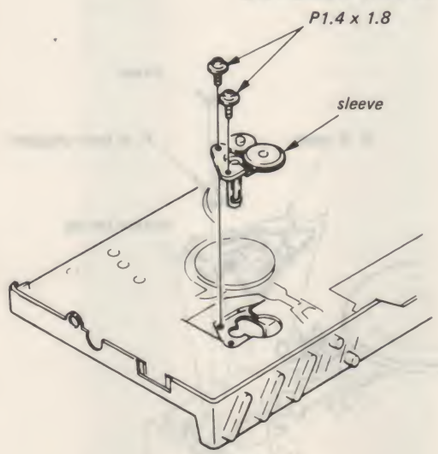

ESCUTCHEON REMOVAL

Be sure to remove the escutcheon after removing the cassette holder.

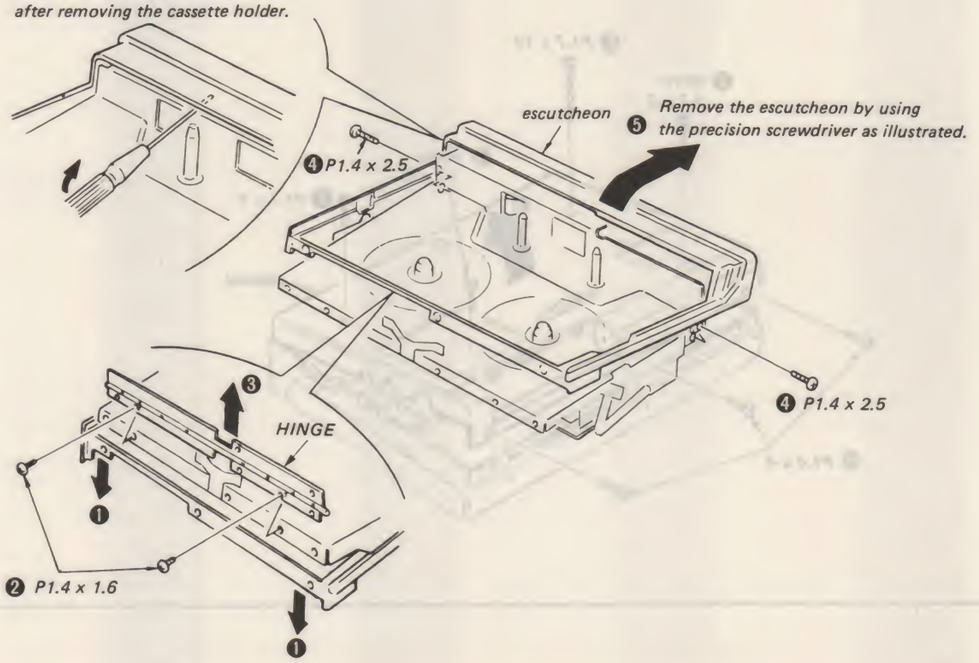

CONTROL PLATE REMOVAL

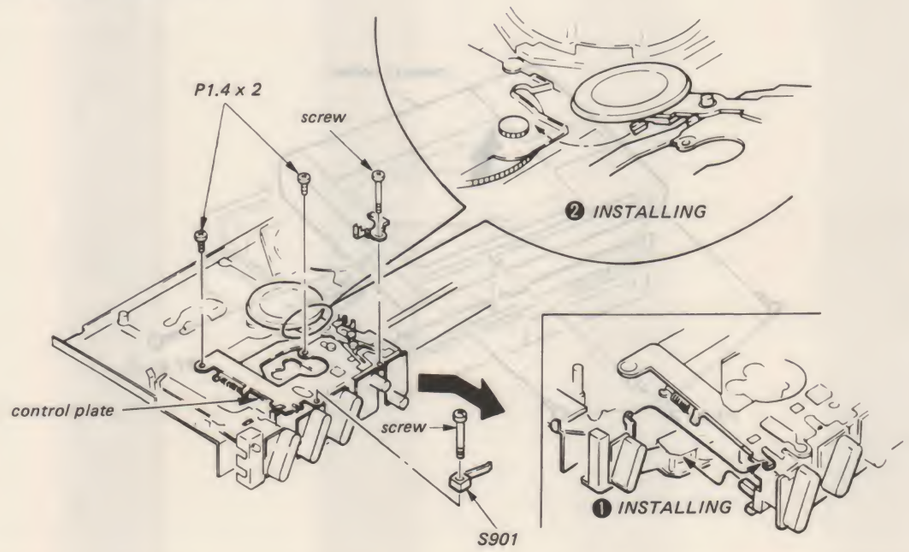

BUTTON HOLDER/FUNCTION BUTTON (REC) REMOVAL

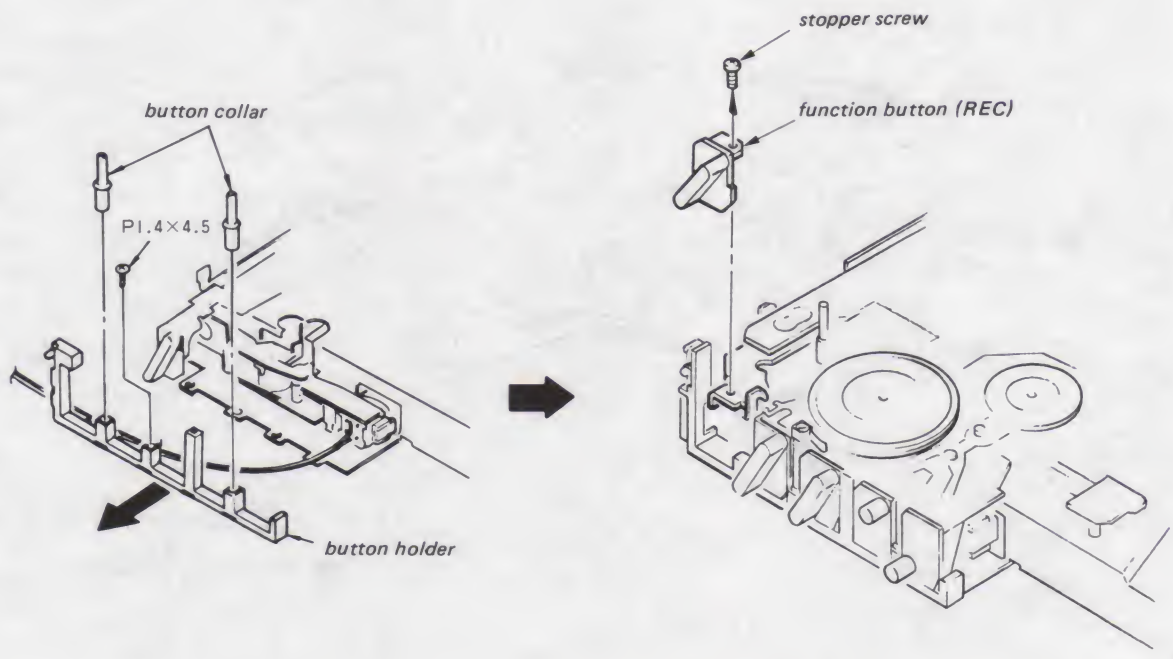

BUTTON (PLAY/STOP/FF/REW), REVERSE WHEEL BLOCK REMOVAL

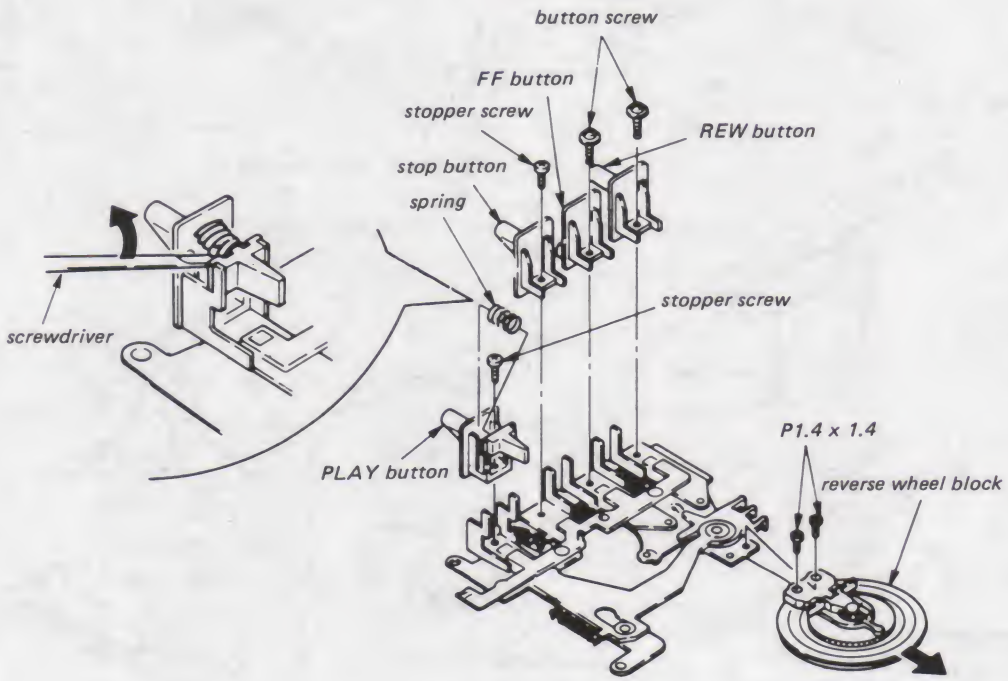

HEAD CHASSIS REMOVAL

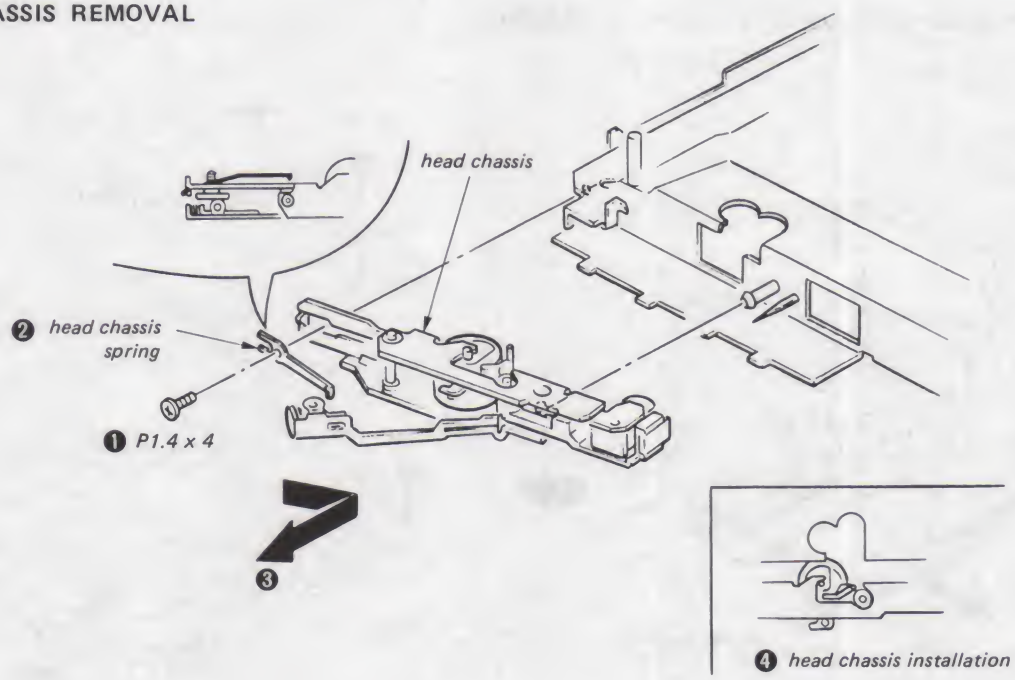

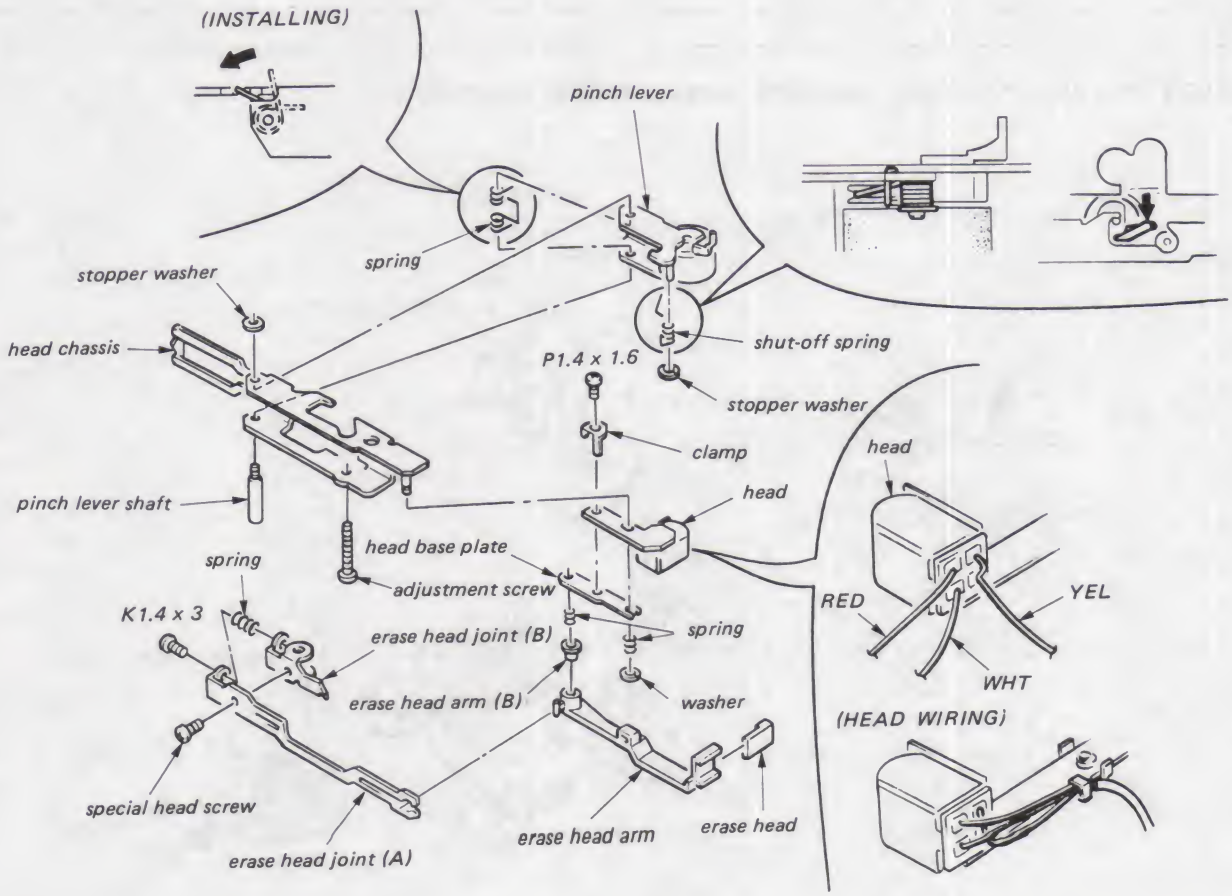

DIAL CORD STRINGING

1. Preparation

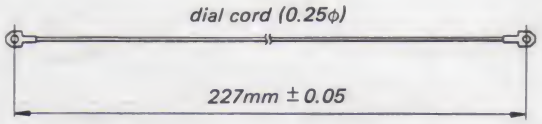

2. Stringing

1) Remove the ferrite-rod antenna.
2) Turn the dial drum fully counterclockwise and string the dial cord in the numerical order given.
3) Install the ferrite-rod antenna.

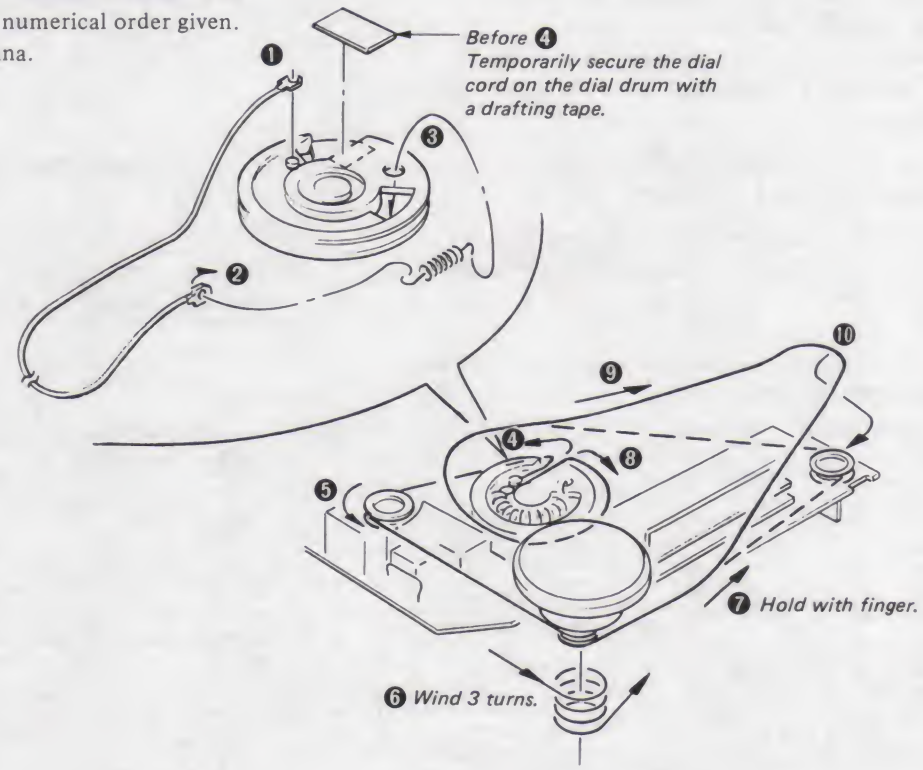

3. Dial Pointer Installation

1) Turn the tuning knob fully counterclockwise.
2) Set the pointer.
3) Set the distance between the holder end and the pointer to 1mm.
4) Secure the pointer with locking compound after setting the scale.

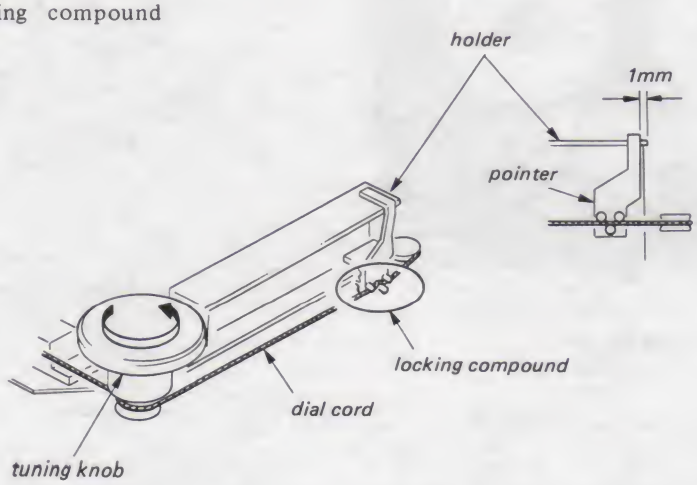

SECTION 3
ADJUSTMENTS

3-1. MECHANICAL ADJUSTMENTS AND MEASUREMENTS

PRECAUTION

1. Clean the following parts with a denatured-alcohol-moistened swab:

   record/playback head — pinch roller
   erase head — rubber belts
   capstan

2. Demagnetize the record/playback head with a head demagnetizer.
   (Take care not to demagnetize the erase head.)
3. Do not use a magnetized screwdriver for the adjustments.
4. After the adjustments, apply suitable locking compound to the parts adjusted.
5. The adjustments should be performed with the rated power supply voltage unless otherwise noted.

Torque Measurement

Perform with 2.5V DC power.

	Torque meter	Meter reading
FWD	CQ-102C	20 – 40 g-cm (0.28 – 0.56 oz-inch)
FF, REW	CQ-201B	More than 60 g-cm (More than 0.83 oz-inch)
Back Tension	CQ-102C	0 – 2.5 g-cm (0 – 0.035 oz-inch)
Tape Pulling Force	CQ-403	More than 45 g-cm (More than 0.62 oz-inch)

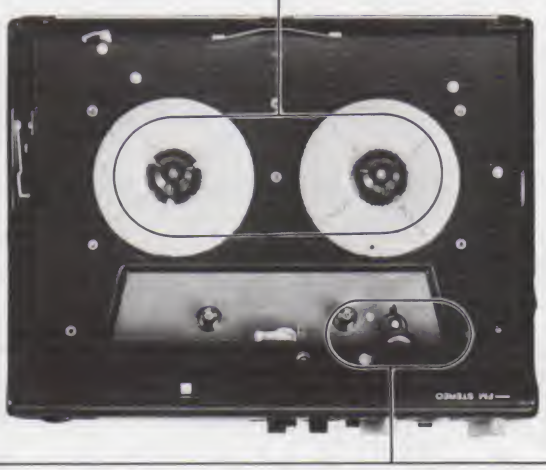

Pinch Roller Pressure Measurement

– Playback Mode –

1. Pull the spring scale in the direction shown by the arrow.
2. Slowly return the pinch roller and read the spring scale just when the pinch roller starts rotating.

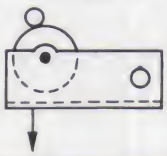

Specification:

170 ± 20 g (5.3 – 6.7 oz)

Thrust Clearance Adjustment

Make sure to rotate each section below smoothly.

	Thrust clearance	Adjustment Parts (Refer to exploded views and parts list.)
Motor wheel	0.2mm	No. 130
Take-up reel	0.05 – 0.15mm	No. 121/122/137/138
Supply reel	0.05 – 0.15mm	No. 125/139/140/121
Reverse wheel	0.05 – 0.15mm	No. 166

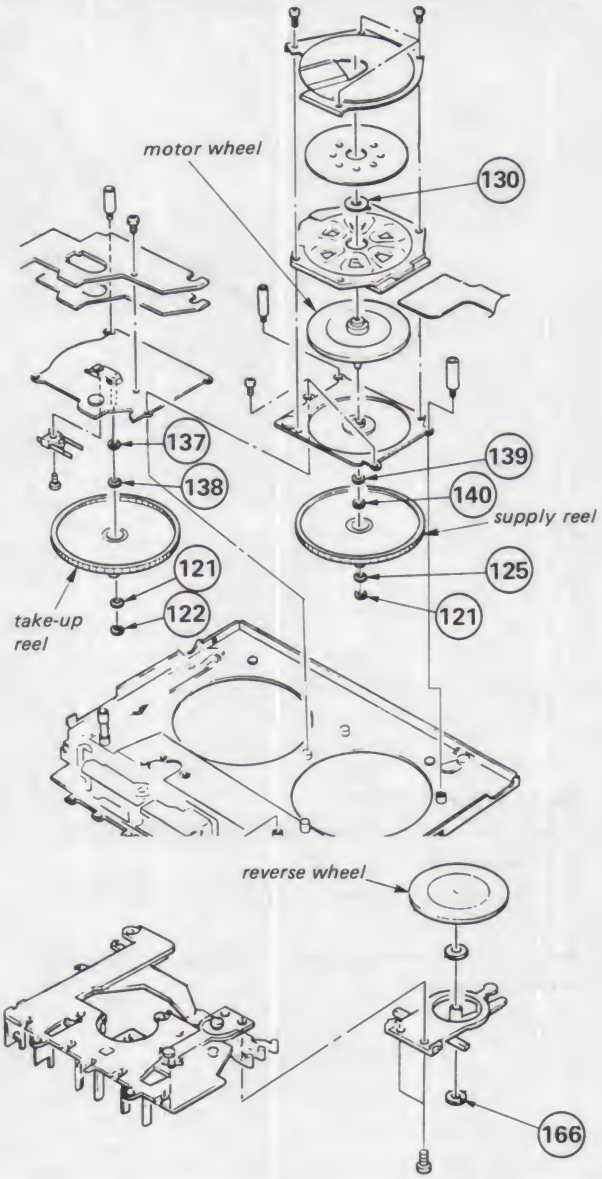

ELECTRICAL ADJUSTMENTS

Note: The adjustment should be performed in the order given in this service manual.
The adjustments should be performed for both L-CH and R-CH.

- **Standard Record:**

Standard Input Level

INPUT	MIC
source impedance	300Ω
input level	0.77mV (−60dB)

Standard output Level

OUTPUT	HEADPHONES
load impedance	32Ω
output level	*0.245V (−20dB)

* Adjust by volume control.

Head Height Adjustment

1. Prepare an adjustment cassette as shown below.

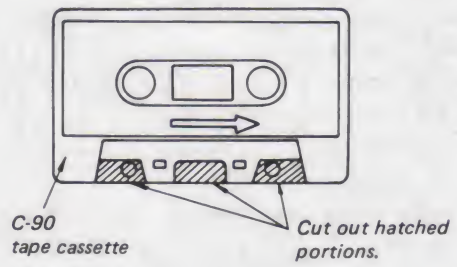

2. In playback mode and viewing from the front, adjust the head heights to eliminate tape curl and tape twist at portions shown by the arrow.

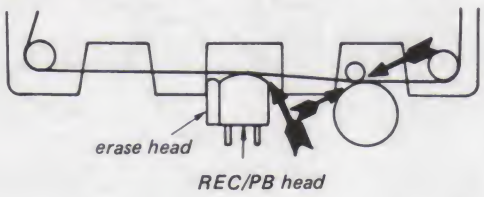

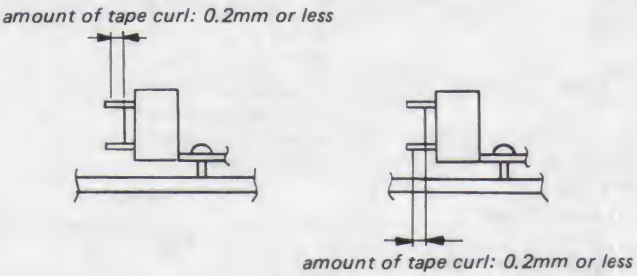

3. If necessary, stick the spacer on positions Ⓐ and Ⓑ.

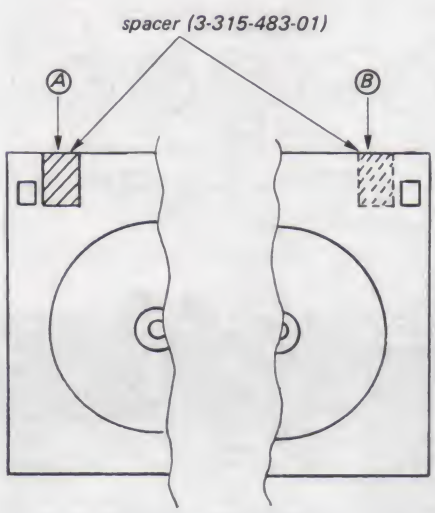

RECORD/PLAYBACK HEAD AZIMUTH ADJUSTMENT

Procedure:

1. Mode: playback

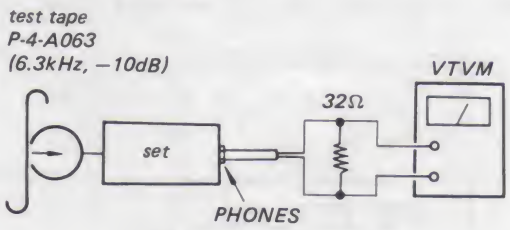

2. Turn the adjustment screw for the maximum output levels. If these levels do not match, turn the adjustment screw until both of output levels match together within 0.5 dB.

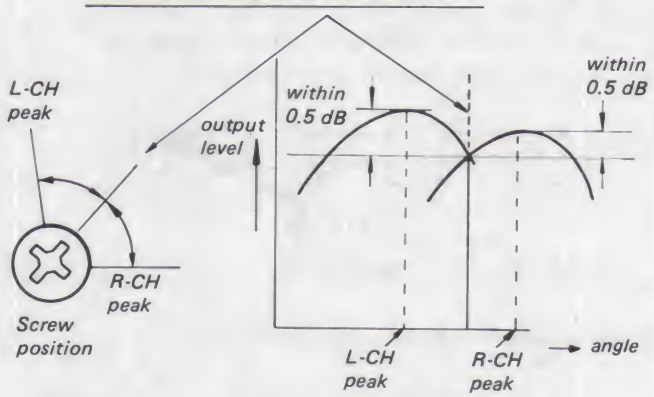

3. Phase Check

Mode: playback

Note) After the adjustments, apply locking compound to the screw.

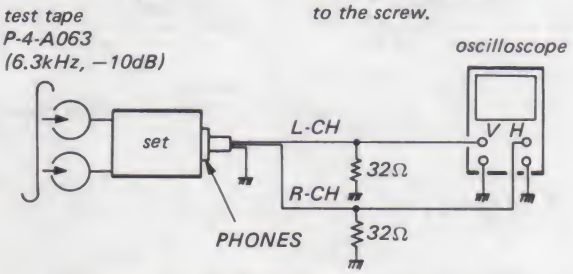

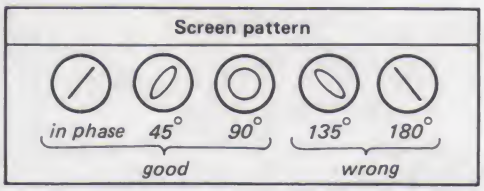

Adjustment Location:

RECORD BIAS ADJUSTMENT

Procedure:

1. RECORD mode

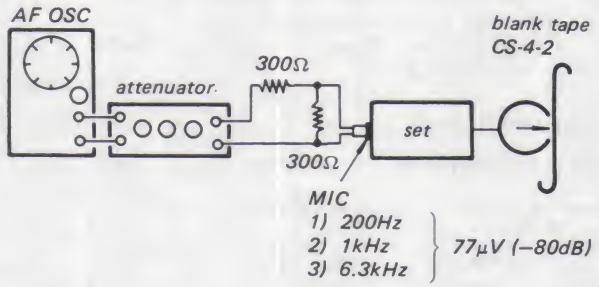

2. PLAYBACK mode

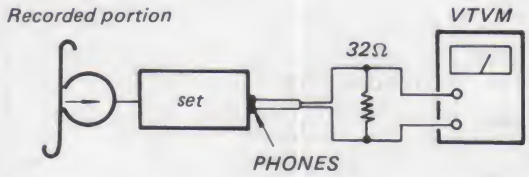

1) Adjust VOLUME control so that 1kHz output becomes 77.5mV (−20dB).
2) Make sure that 200Hz and 3kHz outputs are 0 ±3dB and −3 ±3dB relative to 1kHz output, respectively.
3) If not, disconnect jumper wire.
   Make sure that the specification above is met.

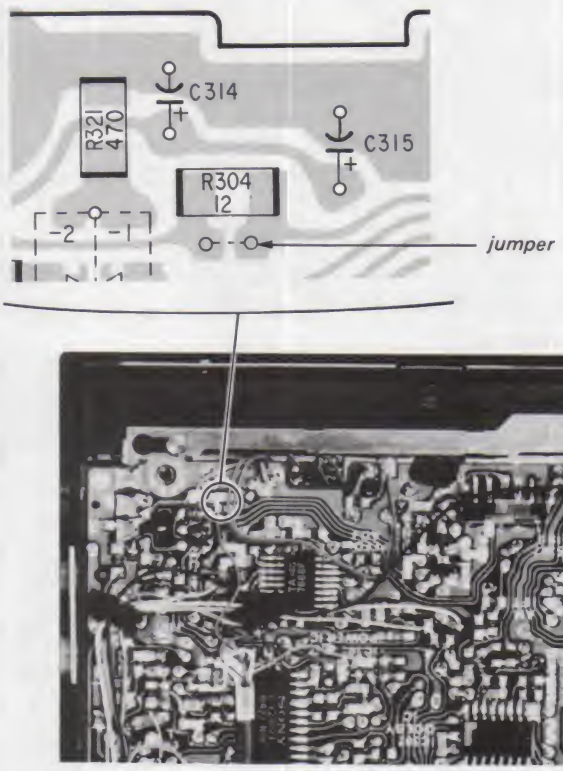

Tape Speed Adjustment

Setting:

VOLUME control: mechanical mid

Procedure:

Mode: playback

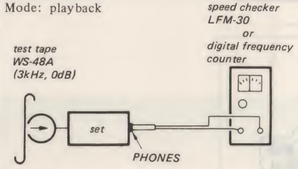

Specification:

Speed checker	Digital frequency counter
±2%	2,940 – 3,060Hz

Adjustment Location: RV601

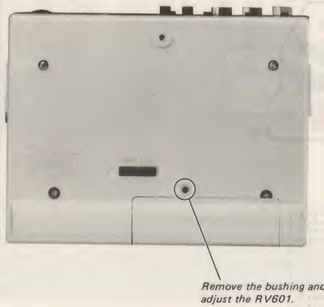

Dolby NR Level Adjustment

Setting:

TAPE switch: NORM
DOLBY NR switch: off

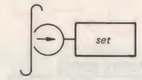

Procedure:

Adjust RV101 (L-CH), RV201 (R-CH) to obtain −27.7dB ±0.5dB (0.03V to 0.034V) output level.

Adjustment Location: main board

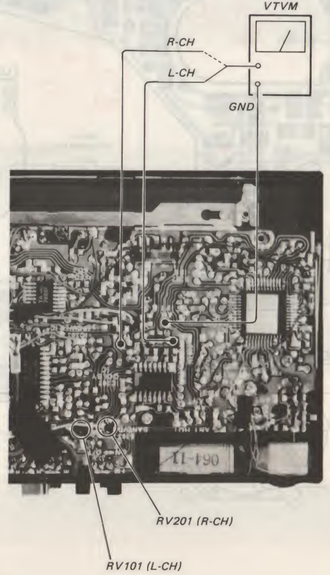

FM SECTION

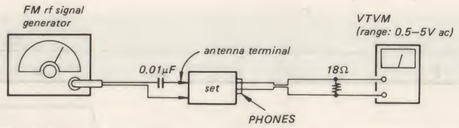

- Repeat the procedures in each adjustment several times, and the frequency coverage and tracking adjustments should be finally done by the trimmer capacitors.
- Solder after the adjustment.

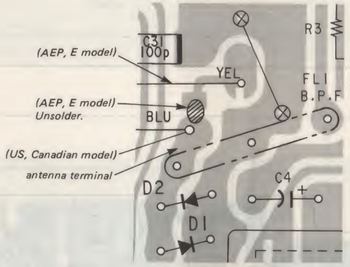

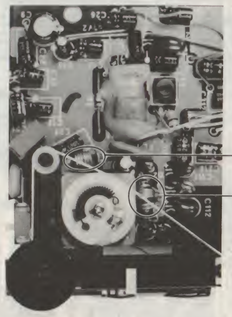

FM FREQUENCY COVERAGE ADJUSTMENT	
Adjust for a maximum VTVM reading	
86.5MHz	109.5MHz
L3	CT2

86.5MHz	L2
109.5MHz	CT3
Adjust for a maximum VTVM reading.	
FM TRACKING ADJUSTMENT	

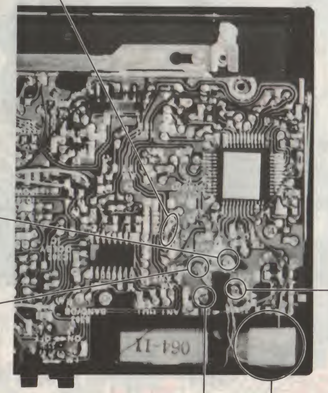

AM SECTION

- **Setting:**

  Band Switch: AM

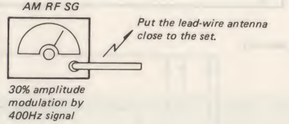

- Repeat the procedures in each adjustment several times, and the frequency coverage and tracking adjustments should be finally done by the trimmer capacitors.

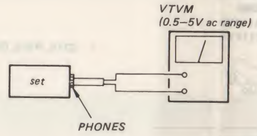

AM FREQUENCY COVERAGE ADJUSTMENT	
Adjust for a maximum reading on VTVM.	
1,680kHz	520kHz
CT1	T1

AM IF ALIGNMENT
Adjust for a maximum reading on VTVM.
455kHz
T2

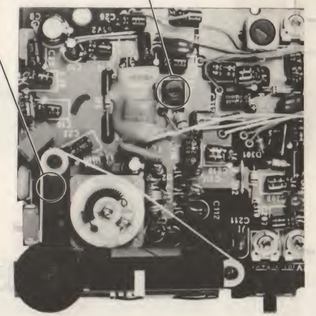

AM TRACKING ADJUSTMENT	
Adjust for a maximum reading on VTVM.	
L1	620kHz
CT4	1,400kHz

- Semiconductor Lead Layouts

CX20023

(Top view)

2SA1162
2SB624-BV4
2SC2712-G
2SC1623-L7
2SD596
DTA114YK
DTC114YK

CX20029

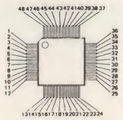

1SS119

CX20085
TA7688F

GL-1PR1

CX20123

(TOP VIEW)

Note:

- Color code of sleeving over the end of the jacket.

- ○—: parts extracted from the component side.
- —●—: parts extracted from the conductor side.
- ⊗ : Through hole.
- : signal path
- : L-CH signal path
- : R-CH signal path
- : B + pattern
- : component-side pattern.

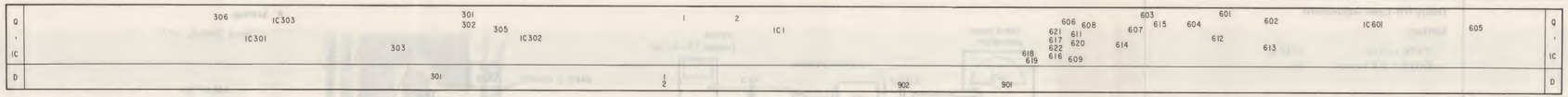

- C314, R308, D301: used for certain sets only.

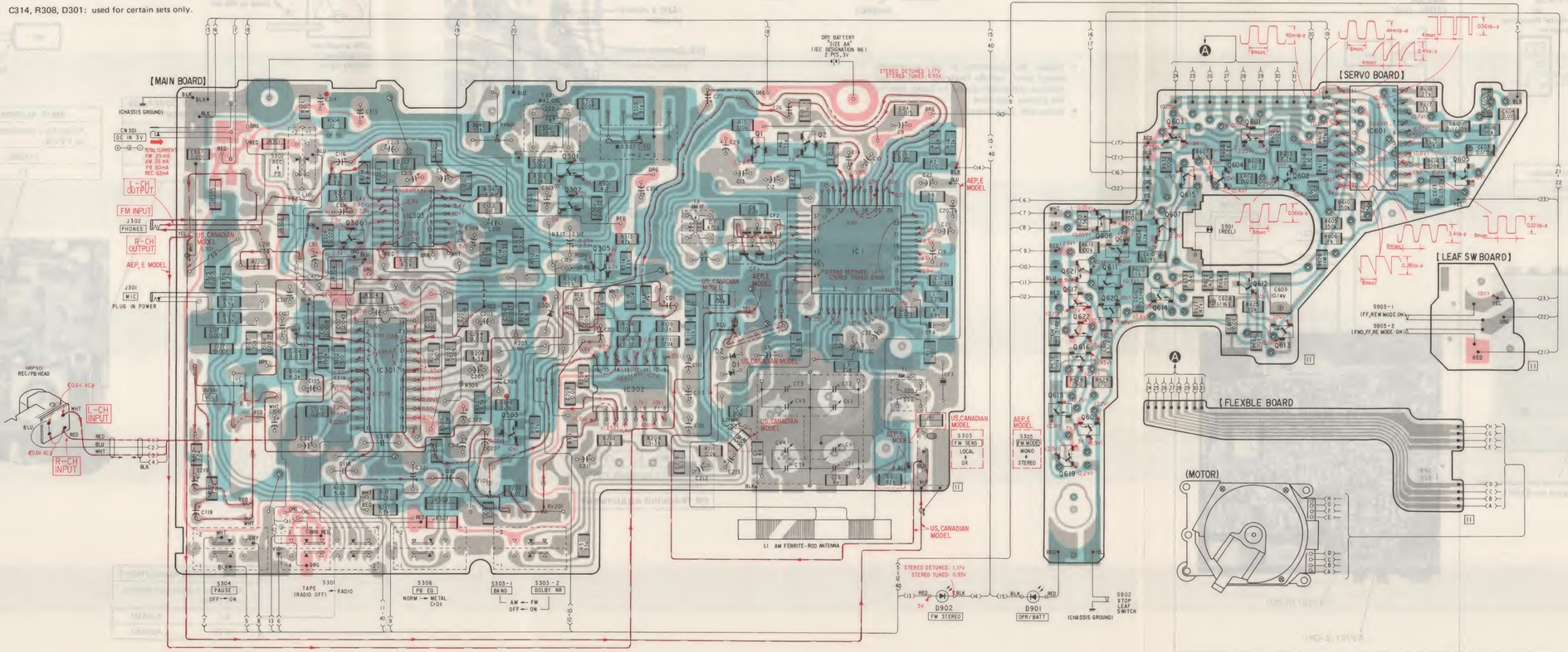

WM-F65 WM-F65

4-2. SCHEMATIC DIAGRAM

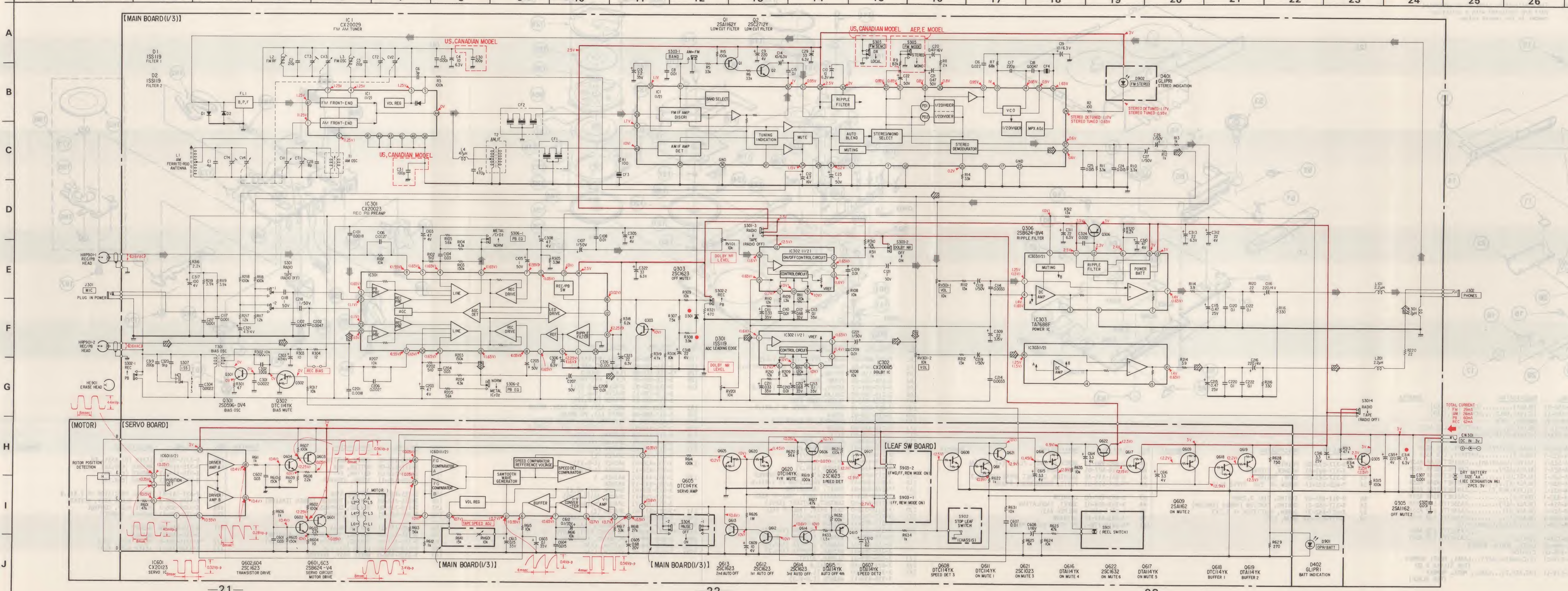

Note:

- All capacitors are in μF unless otherwise noted. pF: μμF 50 WV or less are not indicated except for electrolytics and tantalums.
- All resistors are in Ω and 1/4 W or less unless otherwise specified.
- ⇨ ⇨ : signal path.
- ▬▬ : B+ bus.
- ▭ : adjustment for repair.
- AC voltage readings in the bias oscillator with a VTVM.
- Total current is measured with no cassette installed.
- Voltages are dc with respect to ground unless otherwise noted.
- Readings are taken under no-signal (detuned) conditions with a VOM (50kΩ/V).
  ( ) : AM
  < >: PB
  no mark: FM
- Waveforms are tkaen to ground in no-signal mode by using oscilloscope.
  Voltage variations may be noted due to normal production tolerances.
- Switch

Ref. No.	Switch	Position
S301	FUNCTION	RADIO
S302	PB/REC	PB
S303-1	BAND	FM
S303-2	DOLBY NR	ON
S305	FM MODE	STEREO
S306	PB EQ	NORM
S901	FF, REW/FWD, FF, REW	
S902	STOP REAF	
S903	T REEL	

- C314, R308, D301: used for certain sets only.

SECTION 5
EXPLODED VIEWS AND PARTS LIST

NOTE:
- The mechanical parts with no reference number in the exploded views are not supplied.
- Items marked " ★ " are not stocked since they are seldom required for routine service. Some delay should be anticipated when ordering these items.
- The construction parts of an assembled part are indicated with a collation number in the remark column.

(1)

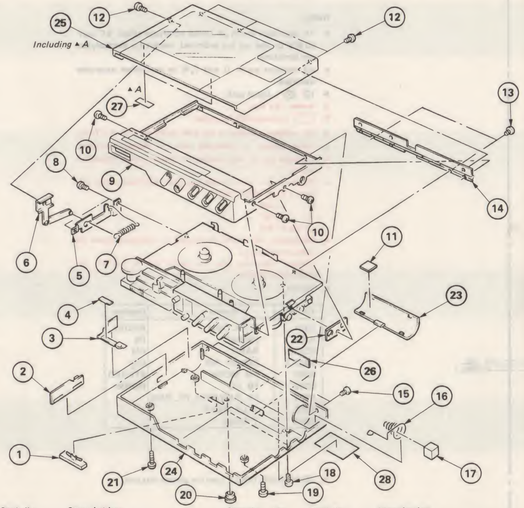

No.	Part No.	Description	Remarks
1	3-324-504-01	KNOB, 1SS	
2	3-324-503-01	KNOB, SWITCH	
3	3-317-526-00	TERMINAL BOARD	
4	3-485-343-01	CUSHION, CABINET UPPER 10X7X0.5	
5	3-317-529-00	PLATE, LOCK, CASSETTE	
6	X-3317-505-0	PLATE ASSY, SLIDE	
7	3-317-551-01	SPRING, TENSION	
8	7-627-850-07	SCREW, PRECISION +P 1.4X2	
9	A-3235-381-A	ESCUTCHEON ASSY	
10	7-627-850-18	SCREW, PRECISION +P 1.4X2.5	
11	9-911-815-01	CUSHION	
12	7-627-850-07	(SILVER,GOLD)...SCREW, PRECISION +P 1.4X2	
	7-627-850-08	(BLACK).....SCREW, PRECISION +P 1.4X2	
13	7-627-551-08	SCREW, PRECISION +P 1.4X1.6	
14	3-324-501-1	HINGE ASSY	
15	7-627-850-67	(SILVER,GOLD)...SCREW, PRECISION +P 1.4X4	
	7-627-850-68	(BLACK).....SCREW, PRECISION +P 1.4X4	
16	3-324-554-01	SPRING	
17	9-911-841-XX	CUSHION (B)	
18	3-880-990-11	(SILVER,GOLD)	
		...SCREW(1.7X5), FLAT, (+)SPECIAL	
	3-880-990-21	(BLACK)....SCREW(1.7X5), FLAT, (+)SPECIAL	
19	7-627-852-17	(SILVER,GOLD)...SCREW, PRECISION +P 1.7X4	
	7-627-852-18	(BLACK).....SCREW, PRECISION +P 1.7X4	
20	3-545-657-11	(BLACK).....BUSH	
	3-545-657-21	(SILVER,GOLD)...BUSH	
21	3-317-552-01	(BLACK).....SCREW (M1.7X10)	
	3-317-552-11	(SILVER,GOLD)...SCREW (M1.7X10)	
22	*3-324-502-01	HOLDER, JACK	
23	X-3324-512-1	(BLACK;E).....BATTERY, LID ASSY	
	X-3324-511-1	(SILVER;E,AEP,Canadian)	
		...BATTERY, LID ASSY	
	X-3324-527-1	(BLACK;US,AEP)...BATTERY, LID ASSY	
	X-3324-533-1	(GOLD;E).....BATTERY, LID ASSY	
24	X-3324-522-1	(SILVER;Canadian)...CABINET REAR ASSY	
	X-3324-523-1	(BLACK;AEP).....CABINET REAR ASSY	
	X-3324-525-1	(BLACK;US).....CABINET REAR ASSY	
	X-3324-530-1	(BLACK;E).....CABINET REAR ASSY	
	X-3324-531-1	(SILVER;AEP,E).....CABINET REAR ASSY	
	X-3324-532-1	(GOLD;E).....CABINET REAR ASSY	
25	X-3324-524-1	(BLACK;AEP).....CASSETTE LID ASSY	
	X-3324-526-1	(BLACK;US).....CASSETTE LID ASSY	
	X-3324-528-1	(BLACK;E).....CASSETTE LID ASSY	
	X-3324-529-1	(SILVER;AEP,Canadian,E)	
		...CASSETTE LID ASSY	
	X-3324-534-1	(GOLD;E).....CASSETTE LID ASSY	
26	3-701-999-00	LABEL, SERIAL NUMBER	
27	3-842-935-00	CUSHION	
28	3-324-579-01	(E,Canadian,AEP)...LABEL, MODEL NUMBER	
		(FOR SILVER & GO	
	3-324-579-11	(US,AEP,E)...LABEL, MODEL NUMBER	
		(FOR BLACK)	

(2)

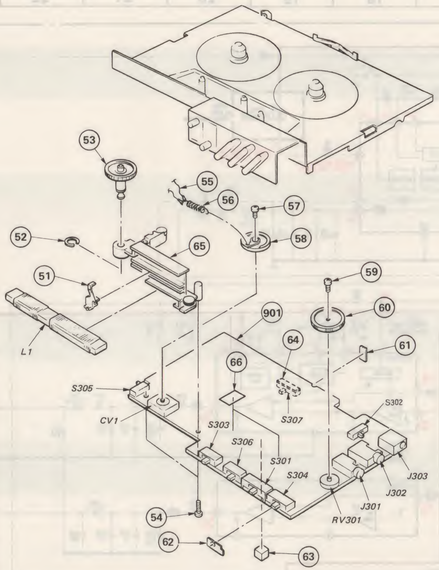

No.	Part No.	Description	Remarks
51	3-317-523-00	POINTER	
52	3-317-557-01	WASHER, STOPPER	
53	3-317-521-00	KNOB, TUNING	
54	7-685-103-14	SCREW +P 2X5 TYPE2 SLIT	
55	9-911-825-52	STRING, DIAL 0.25MM	
56	3-317-558-01	SPRING, TENSION (POWER TENSION)	
57	7-627-552-37	SCREW, PRECISION +P 1.7X3	
58	3-317-535-00	DRUM, DIAL	
59	3-880-990-11	SCREW (1.7X5), FLAT, (+) SPECIAL	
60	3-324-507-01	KNOB, CONTROL	
61	3-831-441-XX	CUSHION, CABINET UPPER 10X7X0.3	
62	*3-324-539-01	PLATE, ORNAMENTAL, PAUSE	
63	3-553-567-00	CUSHION	
64	3-703-929-01	SHEET, INSULATING	
65	X-3317-515-1	HOLDER ASSY	
66	3-831-441-XX	CUSHION	
901	*A-3215-778-A	PC BOARD ASSY, MAIN	

(3)

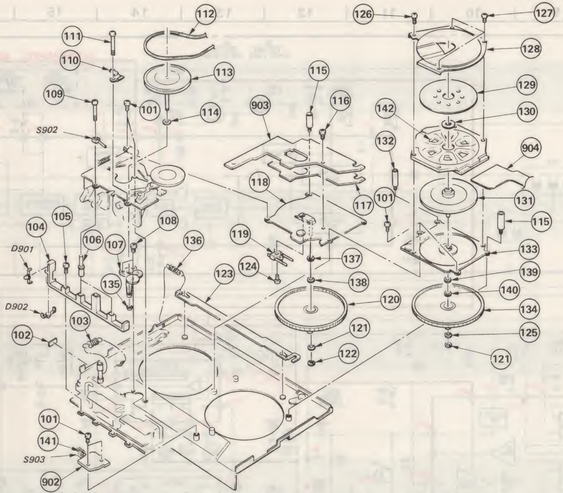

No.	Part No.	Description	Remarks
101	7-627-850-07	SCREW, PRECISION +P 1.4X2	
102	3-485-343-01	CUSHION, CABINET UPPER 10X7X0.5	
103	3-324-519-02	SPRING, TENSION	
104	3-324-529-01	FRAME, BUTTON	
105	7-627-851-17	SCREW, PRECISION +P 1.4X4.5	
106	3-315-399-00	COLLAR, BUTTON	
107	X-3315-343-1	SLEEVE COMP ASSY	
108	7-627-850-78	PRECISION SCREW +P 1.4X1.8	
109	3-324-553-01	SCREW	
110	3-320-420-01	STOPPER, FR LEVER (C)	
111	3-315-404-00	SCREW	
112	3-315-405-00	BELT	
113	X-3317-508-1	FLYWHEEL ASSY	
114	3-315-495-01	WASHER (t=0.25)	
	3-315-495-11	WASHER (t=0.13)	
	3-315-495-21	WASHER (t=0.2)	
	3-315-495-31	WASHER (t=0.3)	
115	3-317-502-00	SHAFT (A), CABINET STOPPER	
116	7-627-850-47	SCREW, PRECISION +P 1.4X1.6	
117	*3-324-530-01	SHEET, INSULATING	
118	X-3324-514-1	CHASSIS ASSY, TAKE-UP REEL	
119	3-315-412-00	CONTACT, OUTSERT (S901)	
120	X-3315-315-0	GEAR ASSY, TAKE-UP REEL	
121	3-317-701-01	WASHER (t=0.45)	
	3-317-701-11	WASHER (t=0.25)	
122	3-315-384-01	WASHER, STOPPER (t=0.13)	
	3-315-384-11	WASHER, STOPPER (t=0.25)	
	3-315-384-21	WASHER, STOPPER (t=0.2)	
	3-315-384-31	WASHER, STOPPER (t=0.3)	
123	3-324-524-01	SLIDER, JOINT	
124	7-627-850-48	+P 1.4X1.6	
125	3-315-415-00	WASHER (1.5-2.3)	
	3-315-415-11	WASHER (1.5-2.3)	
126	3-317-706-01	SCREW (M1.4X2.3)	
127	3-315-485-01	SCRWE (M1.4X2.3), PRECISION	
128	*3-315-419-00	PLATE, SHIELD	
129	3-315-390-00	PLATE, HYSTERESIS	
130	3-315-332-01	SPACER (t=0.05)	
	3-315-332-11	SPACER (t=0.1)	
	3-315-332-21	SPACER (t=0.125)	
131	A-3133-205-A	WHEEL ASSY BLOCK ASSY, MOTOR	
132	3-317-508-00	SHAFT (A), PC BOARD	
133	A-3133-206-A	RIVETING ASSY, MOTOR SLEEVE	
134	3-324-546-01	GEAR (OUTSERT), REEL, SUPPLY	
135	3-315-417-00	BUSHING, CAPSTAN	
136	3-324-520-01	SPRING, TENSION	
137	3-317-703-01	SPACER (E)	
	3-317-703-11	SPACER (E)	
138	3-701-438-01	WASHER (t=0.13)	
	3-701-438-11	WASHER (t=0.25)	
139	3-701-443-01	WASHER, 5	
	3-701-443-11	WASHER	
140	3-317-702-01	SPACER (D)(t=0.2)	
	3-317-702-11	SPACER (D)(t=0.05)	
	3-317-702-21	SPACER (D)(t=0.1)	
141	*3-317-577-01	SPACER (I)	
142	1-462-225-11	COIL, MOTOR (STATOR)	
902	*1-614-766-11	PC BOARD, LEAF SW	
903	*A-3215-688-A	PC BOARD ASSY, SERVO	
904	1-614-764-11	PC BOARD, FLEXIBLE	
S902	1-570-168-12	SWITCH, LEAF	
S903	1-554-586-00	SWITCH, LEAF	

(4)

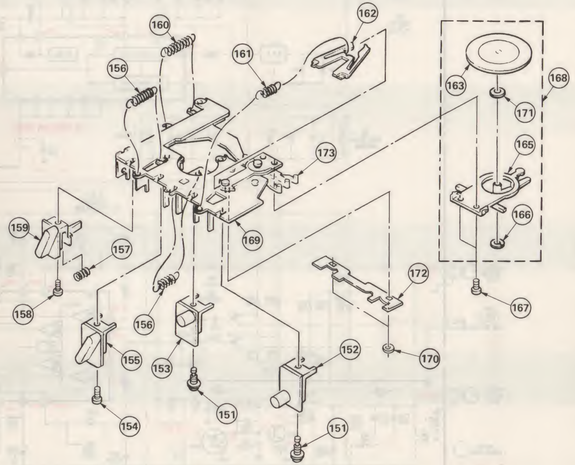

No.	Part No.	Description	Remarks
151	3-315-395-00	SCREW, BUTTON	
152	3-317-513-00	BUTTON, REW	
153	3-317-512-00	BUTTON, FF	
154	3-305-528-11	SCREW, STOPPER	
155	3-315-435-11	BUTTON, STOP	
156	3-315-343-00	SPRING, TENSION (POWER TENSION)	
157	3-315-331-00	SPRING, COMPRESSION	
158	3-305-528-21	SCREW, STOPPER	
159	3-315-432-11	BUTTON, PLAY	
160	3-315-341-00	SPRING, TENSION (POWER TENSION)	
161	3-315-397-00	SPRING, TENSION (POWER TENSION)	
162	3-315-396-00	LEVER (C), F.R	
163	X-3315-308-0	WHEEL ASSY, REVERSE	
165	X-3315-307-0	LEVER (B) ASSY, FR	
166	3-315-414-00	WASHER (t=0.25)	
	3-315-414-11	WASHER (t=1.88)	
	3-315-414-21	WASHER (t=0.13)	
167	7-627-551-47	SCREW, PRECISION +P 1.4X1.4	
168	A-3125-002-A	WHEEL BLOCK ASSY, REVERSE	
169	X-3324-505-1	PLATE ASSY, CONTROL	
170	3-315-384-41	WASHER, STOPPER	
171	3-315-416-00	WASHER	
	3-315-416-21	WASHER	
172	*X-3315-304-5	PLATE ASSY, LOCK	
173	X-3320-316-1	LEVER ASSY, PLAY	

(5)

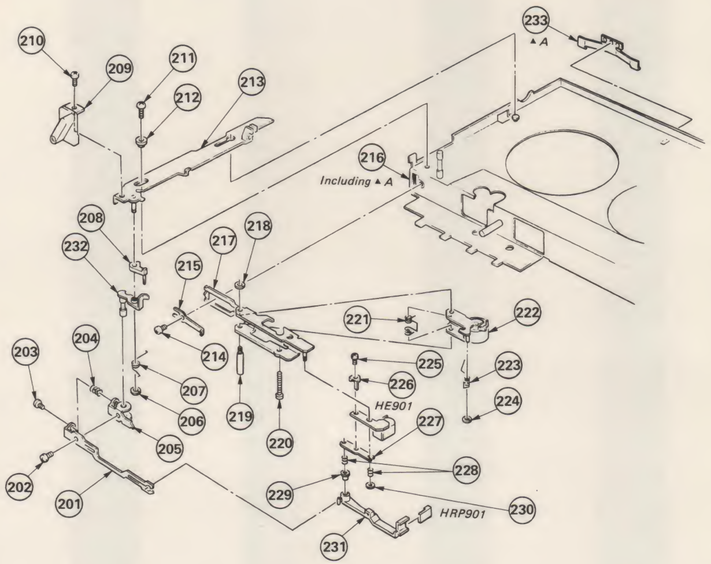

No.	Part No.	Description	Remarks
201	3-320-343-11	JOINT (A), E HEAD	
202	3-703-816-01	SCREW (M1.4X2.0), SPECIAL HEAD	
203	7-627-451-28	SCREW, PRECISION +K 1.4X3	
204	3-320-352-01	SPRING, COMPRESSION	
205	3-320-344-01	JOINT (B), E HEAD	
206	3-578-224-11	WASHER	
207	3-320-350-01	SPRING	
208	3-320-349-01	CLAW, REC LOCK	
209	3-324-508-01	BUTTON, REC	
210	3-305-528-11	SCREW, STOPPER	
211	7-627-850-28	SCREW, PRECISION +P 1.4X3	
212	3-324-517-01	SPACER, LEVER, REC	
213	X-3324-503-1	LEVER ASSY, REC	
214	7-627-850-37	SCREW, PRECISION +P 1.4X1.4	
215	3-315-406-00	SPRING	
216	A-3125-010-A	CHASSIS BLOCK ASSY, REEL	
217	X-3324-507-1	CHASSIS ASSY, HEAD	

No.	Part No.	Description	Remarks
218	3-315-384-11	WASHER, STOPPER (t=0.25)	
219	3-315-393-00	SHAFT, PINCH LEVER	
220	3-324-540-01	SCREW, ADJUSTMENT, AZIMUTH	
221	3-315-394-00	SPRING	
223	3-315-357-00	SPRING	
224	3-315-384-31	WASHER, STOPPER	
225	7-627-850-47	SCREW, PRECISION +P 1.4X1.6	
226	3-324-531-01	CLAMP	
227	3-324-541-01	PLATE, BASE, HEAD	
228	3-324-542-01	SPRING, COMPRESSION	
229	3-324-551-01	SHAFT (B), ARM, E HEAD	
230	3-324-544-01	WASHER (DIA. 2.3-1)	
231	3-324-543-01	ARM, HEAD, E	
232	X-3324-508-1	ARM ASSY, JOINT, E HEAD	
233	3-317-556-01	SPRING	
HE901	8-825-581-10	HEAD, ERASE	
HRP901	8-825-533-40	R/P HEAD	

NOTE:

- Items marked " ★ " are not stocked since they are seldom required for routine service. Some delay should be anticipated when ordering these items.
- If there are two or more same circuitsin a set such as a stereophonic machine, only typical circuit parts may be indicated and capacitors and resistors in other same circuits may be omitted.

CAPACITORS:
MF:μF, PF:μμF.

RESISTORS
- All resistors are in ohms.
- F : nonflammable

COILS
- MMH : mH, UH : μH

SEMICONDUCTORS
In each case, U : μ, for example:
UA...: μA..., UPA...: μPA..., UPC...: μPC, UPD...: μPD...

ELECTRICAL PARTS

Ref.No.	Part No.	Description			
901	*A-3215-778-A	PC BOARD ASSY, MAIN			
902	*1-614-766-11	PC BOARD, LEAF SW			
903	*A-3215-688-A	PC BOARD ASSY, SERVO			
904	1-614-764-11	PC BOARD, FLEXIBLE			
C1	1-163-221-00	CERAMIC CHIP 4PF	0.25PF		50V
C2	1-163-234-00	CERAMIC CHIP 20PF	5%		50V
C3	1-163-141-00	CERAMIC CHIP 0.001MF	5%		50V
C4	1-124-435-00	ELECT 10MF	20%		6.3V
C5	1-163-234-00	CERAMIC CHIP 20PF	5%		50V
C6	1-163-220-11	CERAMIC CHIP 3PF	0.25PF		50V
C7	1-163-133-00	CERAMIC CHIP 470PF	5%		50V
C8	1-163-031-00	CERAMIC CHIP 0.01MF			50V
C9	1-124-434-00	ELECT 220MF	20%		4V
C10	1-124-435-00	ELECT 10MF	20%		6.3V
C12	1-124-461-11	ELECT 4.7MF	20%		16V
C13	1-124-437-00	ELECT 2.2MF	20%		35V
C14	1-124-435-00	ELECT 10MF	20%		6.3V
C15	1-163-038-00	CERAMIC CHIP 0.1MF			25V
C16	1-163-033-00	CERAMIC CHIP 0.022MF	10%		25V
C17	1-163-125-00	CERAMIC CHIP 220PF	5%		50V
C18	1-163-017-00	CERAMIC CHIP 0.0047MF	10%		50V
C19	1-124-435-00	ELECT 10MF	20%		6.3V
C20	1-124-461-11	ELECT 4.7MF	20%		16V
C21	1-124-465-00	ELECT 0.47MF	20%		50V
C22	1-124-438-00	ELECT 1MF	20%		50V
C23	1-124-438-00	ELECT 1MF	20%		50V
C24	1-163-023-00	CERAMIC CHIP 0.015MF	10%		50V
C25	1-163-023-00	CERAMIC CHIP 0.015MF	10%		50V
C26	1-124-438-00	ELECT 1MF	20%		50V
C27	1-124-438-00	ELECT 1MF	20%		50V
C28	1-163-091-00	CERAMIC CHIP 8PF	0.25PF		50V
C29	1-131-386-00	TANTALUM 33MF	20%		6.3V
C30	1-163-181-00	(US,Canadian)...CAP,CHIP	CERAMIC		100PF
C31	1-163-181-00	(US,Canadian)...CAP,CHIP	CERAMIC		100PF
C101	1-163-012-00	CERAMIC CHIP 0.0018MF	10%		50V
C102	1-163-017-00	CERAMIC CHIP 0.0047MF	10%		50V
C103	1-124-432-00	ELECT 47MF	20%		4V
C104	1-163-810-00	CERAMIC CHIP 0.03MF	10%		25V
C105	1-124-438-00	ELECT 1MF	20%		50V
C106	1-163-014-00	CERAMIC CHIP 0.0027MF	10%		50V
C107	1-124-438-00	ELECT 1MF	20%		50V
C108	1-163-021-00	CERAMIC CHIP 0.01MF	10%		50V
C109	1-163-021-00	CERAMIC CHIP 0.01MF	5%		50V
C110	1-163-021-00	CERAMIC CHIP 0.01MF	5%		50V
C111	1-131-344-00	TANTALUM 0.33MF	10%		35V
C112	1-131-346-00	TANTALUM 0.68MF	10%		35V

ELECTRICAL PARTS

Ref.No.	Part No.	Description			
C113	1-131-341-00	TANTALUM 0.1MF	10%		35V
C114	1-163-015-00	CERAMIC CHIP 0.0033MF	10%		50V
C115	1-127-504-00	ELECT(SOLID) 0.47MF	20%		25V
C116	1-124-434-00	ELECT 220MF	20%		4V
C117	1-163-141-00	CERAMIC CHIP 0.001MF	5%		50V
C118	1-124-499-11	ELECT 1MF	20%		50V
C119	1-124-438-00	ELECT 1MF	20%		50V
C120	1-163-038-00	CERAMIC CHIP 0.1MF			25V
C121	1-124-438-00	ELECT 1MF	20%		50V
C122	1-163-038-00	CERAMIC CHIP 0.1MF			25V
C201	1-163-012-00	CERAMIC CHIP 0.0018MF	10%		50V
C202	1-163-017-00	CERAMIC CHIP 0.0047MF	10%		50V
C203	1-124-432-00	ELECT 47MF	20%		4V
C204	1-163-810-00	CERAMIC CHIP 0.03MF	10%		25V
C205	1-124-438-00	ELECT 1MF	20%		50V
C206	1-163-014-00	CERAMIC CHIP 0.0027MF	10%		50V
C207	1-124-438-00	ELECT 1MF	20%		50V
C208	1-163-021-00	CERAMIC CHIP 0.01MF	10%		50V
C209	1-163-021-00	CERAMIC CHIP 0.01MF	5%		50V
C210	1-163-021-00	CERAMIC CHIP 0.01MF	5%		50V
C211	1-131-344-00	TANTALUM 0.33MF	10%		35V
C212	1-131-346-00	TANTALUM 0.68MF	10%		35V
C213	1-131-341-00	TANTALUM 0.1MF	10%		35V
C214	1-163-015-00	CERAMIC CHIP 0.0033MF	10%		50V
C215	1-127-504-00	ELECT(SOLID) 0.47MF	20%		25V
C216	1-124-434-00	ELECT 220MF	20%		4V
C217	1-163-141-00	CERAMIC CHIP 0.001MF	5%		50V
C218	1-124-499-11	ELECT 1MF	20%		50V
C219	1-124-438-00	ELECT 1MF	20%		50V
C220	1-163-038-00	CERAMIC CHIP 0.1MF			25V
C221	1-124-438-00	ELECT 1MF	20%		50V
C222	1-163-038-00	CERAMIC CHIP 0.1MF			25V
C301	1-163-013-00	CERAMIC CHIP 0.0022MF	10%		50V
C302	1-163-117-00	CERAMIC CHIP 100PF	5%		50V
C303	1-124-432-00	ELECT 47MF	20%		4V
C304	1-163-013-00	CERAMIC CHIP 0.0022MF	10%		50V
C305	1-124-432-00	ELECT 47MF	20%		4V
C306	1-131-385-00	TANTALUM 22MF	20%		6.3V
C307	1-163-141-00	CERAMIC CHIP 0.001MF	5%		50V
C308	1-124-432-00	ELECT 47MF	20%		4V
C309	1-131-391-00	TANTALUM 22MF	10%		3.15V
C310	1-124-432-00	ELECT 47MF	20%		4V
C311	1-131-385-00	TANTALUM 22MF	10%		6.3V
C312	1-124-430-00	ELECT 22MF	20%		4V
C313	1-131-385-00	TANTALUM 22MF	10%		6.3V
C314	1-131-384-00	TANTALUM 15MF	10%		6.3V

ELECTRICAL PARTS

Ref.No.	Part No.	Description			
C315	1-124-434-00	ELECT 220MF	20%		4V
C316	1-124-436-00	ELECT 3.3MF	20%		25V
C317	1-124-433-00	ELECT 100MF	20%		4V
C318	1-124-430-00	ELECT 22MF	20%		4V
C319	1-163-124-00	CERAMIC CHIP 200PF	5%		50V
C320	1-163-116-00	CERAMIC CHIP 91PF	5%		50V
C321	1-124-432-00	ELECT 47MF	20%		4V
C322	1-131-386-00	TANTALUM 33MF	10%		6.3V
C323	1-131-385-00	TANTALUM 22MF	10%		6.3V
C324	1-163-033-00	CERAMIC CHIP 0.022MF			50V
C325	1-163-141-00	CERAMIC CHIP 0.001MF	5%		50V
C326	1-163-141-00	CERAMIC CHIP 0.001MF	5%		50V
C601	1-163-810-00	CERAMIC CHIP 0.03MF	10%		25V
C602	1-163-810-00	CERAMIC CHIP 0.03MF	10%		25V
C603	1-135-070-00	TANTAL. CHIP 0.1MF	10%		35V
C604	1-163-023-00	CERAMIC CHIP 0.015MF	10%		50V
C605	1-135-087-21	TANTAL. CHIP 0.68MF			20V
C607	1-163-021-00	CERAMIC CHIP 0.01MF	10%		50V
C608	1-135-091-00	TANTAL. CHIP 1MF			50V
C609	1-135-104-00	TANTAL. CHIP 10MF			4V
C610	1-135-103-00	TANTAL. CHIP 3.3MF	10%		4V
C612	1-135-070-00	TANTAL. CHIP 0.1MF	10%		35V
C613	1-135-071-21	TANTAL. CHIP 0.15MF			35V
C614	1-135-103-00	TANTAL. CHIP 3.3MF	10%		4V
C615	1-135-103-00	TANTAL. CHIP 3.3MF	10%		4V
C616	1-135-103-00	TANTAL. CHIP 3.3MF	10%		4V
CF1	1-567-177-00	FILTER, CERAMIC			
CF2	1-567-166-00	FILTER, CERAMIC			
CF3	1-567-166-00	FILTER, CERAMIC			
CF4	1-567-164-00	VIBRATOR, CERAMIC			
CN301	1-507-850-00	JACK, EXTENTION POWER			
CV1	1-151-453-00	CAP, TUNING, POLYETHYLENE			
D1	8-719-911-19	DIODE 1SS119			
D2	8-719-911-19	DIODE 1SS119			
D301	8-719-911-19	DIODE 1SS119			
D901	8-719-912-24	DIODE GL-1PR1 (OPR/BATT)			
D902	8-719-912-24	DIODE GL-1PR1 (FM STEREO)			
FL1	1-235-171-00	FILTER, BAND PASS			
HE901	8-825-581-10	HEAD, ERASE			
HRP901	8-825-533-40	R/P HEAD			
IC1	8-759-908-89	IC CX20029			
IC301	8-759-907-36	IC CX20023			
IC302	8-759-908-	IC CX20085-T1			
IC303	8-759-200-95	IC TA7688F			
IC601	8-752-012-32	IC CX20123			
J301	1-507-977-21	JACK (MIC)			
J302	1-507-977-11	JACK (PHONES)			
JR1	1-216-295-00	METAL CHIP 0	5%		1/10W
JR2	1-216-295-00	METAL CHIP 0	5%		1/10W
JR301	1-216-295-00	METAL CHIP 0	5%		1/10W
JR302	1-216-295-00	METAL CHIP 0	5%		1/10W
JR303	1-216-295-00	METAL CHIP 0	5%		1/10W
JR304	1-216-295-00	METAL CHIP 0	5%		1/10W
JR305	1-216-296-00	METAL CHIP 0	5%		1/8W

ELECTRICAL PARTS

Ref.No.	Part No.	Description			
JR306	1-216-296-00	METAL CHIP 0	5%		1/8W
JR307	1-216-296-00	METAL CHIP 0	5%		1/8W
JR308	1-216-296-00	METAL CHIP 0	5%		1/8W
L1	1-402-064-11	ANTENNA, FERRITE-ROD (MW)			
L2	*1-422-210-11	COIL, AIR-CORE (FM RF)			
L3	1-422-225-11	COIL, AIR-CORE (FM OSC)			
L4	1-410-029-11	MICRO INDUCTOR 47UH			
L101	1-408-555-00	MICRO INDUCTOR 2.2UH			
L201	1-408-555-00	MICRO INDUCTOR 2.2UH			
L301	1-408-555-00	MICRO INDUCTOR 2.2UH			
Q1	8-729-216-22	TRANSISTOR 2SA1162			
Q2	8-729-100-67	TRANSISTOR 2SC1623-L7			
Q301	8-729-159-64	TRANSISTOR 2SD596			
Q302	8-729-900-52	TRANSISTOR DTC114YK			
Q303	8-729-100-67	TRANSISTOR 2SC1623-L7			
Q305	8-729-216-22	TRANSISTOR 2SA1162			
Q306	8-729-162-44	TRANSISTOR 2SB624BV4			
Q601	8-729-162-44	TRANSISTOR 2SB624BV4			
Q602	8-729-271-22	TRANSISTOR 2SC2712-G			
Q603	8-729-162-44	TRANSISTOR 2SB624BV4			
Q604	8-729-271-22	TRANSISTOR 2SC2712-G			
Q605	8-729-900-52	TRANSISTOR DTC114YK			
Q606	8-729-271-22	TRANSISTOR 2SC2712-G			
Q607	8-729-901-46	TRANSISTOR DTA114YK			
Q608	8-729-900-52	TRANSISTOR DTC114YK			
Q609	8-729-901-46	TRANSISTOR DTA114YK			
Q611	8-729-901-46	TRANSISTOR DTA114YK			
Q612	8-729-271-22	TRANSISTOR 2SC2712-G			
Q613	8-729-271-22	TRANSISTOR 2SC2712-G			
Q614	8-729-271-22	TRANSISTOR 2SC2712-G			
Q615	8-729-901-46	TRANSISTOR DTA114YK			
Q616	8-729-901-46	TRANSISTOR DTA114YK			
Q617	8-729-901-46	TRANSISTOR DTA114YK			
Q618	8-729-900-52	TRANSISTOR DTC114YK			
Q619	8-729-901-46	TRANSISTOR DTA114YK			
Q620	8-729-900-52	TRANSISTOR DTC114YK			
Q621	8-729-271-22	TRANSISTOR 2SC2712-G			
Q622	8-729-271-22	TRANSISTOR 2SC2712-G			
R1	1-216-025-00	METAL CHIP 100	5%		1/10W
R2	1-216-025-00	METAL CHIP 100	5%		1/10W
R3	1-247-879-00	CARBON 100K	5%		1/6W
R5	1-216-085-00	METAL CHIP 33K	5%		1/10W
R6	1-216-085-00	METAL CHIP 33K	5%		1/10W
R7	1-216-093-00	METAL CHIP 68K	5%		1/10W
R8	1-216-056-00	METAL CHIP 2K	5%		1/10W
R9	1-216-095-00	(E)...METAL CHIP 82K	5%		1/10W
R10	1-216-061-00	METAL CHIP 3.3K	5%		1/10W
R11	1-216-061-00	METAL CHIP 3.3K	5%		1/10W
R12	1-216-049-00	METAL CHIP 1K	5%		1/10W
R13	1-216-049-00	METAL CHIP 1K	5%		1/10W
R14	1-216-085-00	METAL CHIP 33K	5%		1/10W
R15	1-216-097-00	METAL CHIP 100K	5%		1/10W
R102	1-216-042-00	METAL CHIP 510	5%		1/10W
R103	1-216-101-00	METAL CHIP 150K	5%		1/10W
R104	1-216-064-00	METAL CHIP 4.3K	5%		1/10W
R105	1-216-216-00	METAL CHIP 5.6K	5%		1/8W

ELECTRICAL PARTS

Ref.No.	Part No.	Description			
R107	1-216-073-00	METAL CHIP	10K	5%	1/10W
R108	1-216-073-00	METAL CHIP	10K	5%	1/10W
R109	1-216-052-00	METAL CHIP	1.3K	5%	1/10W
R110	1-216-075-00	METAL CHIP	12K	5%	1/10W
R111	1-216-099-00	METAL CHIP	120K	5%	1/10W
R112	1-216-053-00	METAL CHIP	1.5K	5%	1/10W
R114	1-216-306-11	METAL CHIP	3.9	5%	1/10W
R116	1-216-037-00	METAL CHIP	330	5%	1/10W
R117	1-216-051-00	METAL CHIP	1.2K	5%	1/10W
R118	1-216-097-00	METAL CHIP	100K	5%	1/10W
R119	1-216-063-00	METAL CHIP	3.9K	5%	1/10W
R120	1-216-009-00	METAL CHIP	22	5%	1/10W
R202	1-216-042-00	METAL CHIP	510	5%	1/10W
R203	1-216-101-00	METAL CHIP	150K	5%	1/10W
R204	1-216-064-00	METAL CHIP	4.3K	5%	1/10W
R205	1-247-849-00	CARBON	5.6K	5%	1/6W
R207	1-216-073-00	METAL CHIP	10K	5%	1/10W
R208	1-216-073-00	METAL CHIP	10K	5%	1/10W
R209	1-216-052-00	METAL CHIP	1.3K	5%	1/10W
R210	1-216-075-00	METAL CHIP	12K	5%	1/10W
R211	1-216-099-00	METAL CHIP	120K	5%	1/10W
R212	1-216-053-00	METAL CHIP	1.5K	5%	1/10W
R214	1-216-306-11	METAL CHIP	3.9	5%	1/10W
R216	1-216-037-00	METAL CHIP	330	5%	1/10W
R217	1-216-051-00	METAL CHIP	1.2K	5%	1/10W
R218	1-216-097-00	METAL CHIP	100K	5%	1/10W
R219	1-216-063-00	METAL CHIP	3.9K	5%	1/10W
R220	1-216-009-00	METAL CHIP	22	5%	1/10W
R301	1-216-308-00	METAL CHIP	4.7	5%	1/10W
R302	1-216-073-00	METAL CHIP	10K	5%	1/10W
R303	1-216-001-00	METAL CHIP	10	5%	1/10W
R304	1-216-003-11	METAL CHIP	12	5%	1/10W
R305	1-216-133-00	METAL CHIP	3.3M	5%	1/10W
R306	1-216-073-00	METAL CHIP	10K	5%	1/10W
R307	1-216-070-00	METAL CHIP	7.5K	5%	1/10W
R308	1-216-063-00	METAL CHIP	3.9K	5%	1/10W
R309	1-247-855-00	CARBON	10K	5%	1/6W
R310	1-247-855-00	CARBON	10K	5%	1/6W
R311	1-216-049-00	METAL CHIP	1K	5%	1/10W
R312	1-216-076-00	METAL CHIP	13K	5%	1/10W
R313	1-216-089-00	METAL CHIP	47K	5%	1/10W
R314	1-216-061-00	METAL CHIP	3.3K	5%	1/10W
R315	1-216-097-00	METAL CHIP	100K	5%	1/10W
R316	1-216-057-00	METAL CHIP	2.2K	5%	1/10W
R317	1-247-855-00	CARBON	10K	5%	1/6W
R318	1-247-850-00	CARBON	6.2K	5%	1/6W
R319	1-216-089-00	METAL CHIP	47K	5%	1/10W
R320	1-216-071-00	METAL CHIP	8.2K	5%	1/10W
R321	1-216-041-00	METAL CHIP	470	5%	1/10W
R601	1-216-089-00	METAL CHIP	47K	5%	1/10W
R602	1-216-097-00	METAL CHIP	100K	5%	1/10W
R603	1-216-057-00	METAL CHIP	2.2K	5%	1/10W
R604	1-216-001-00	METAL CHIP	10	5%	1/10W
R605	1-216-101-00	METAL CHIP	150K	5%	1/10W

ELECTRICAL PARTS

Ref.No.	Part No.	Description			
R606	1-216-049-00	METAL CHIP	1K	5%	1/10W
R607	1-216-097-00	METAL CHIP	100K	5%	1/10W
R608	1-216-057-00	METAL CHIP	2.2K	5%	1/10W
R609	1-216-001-00	METAL CHIP	10	5%	1/10W
R610	1-216-101-00	METAL CHIP	150K	5%	1/10W
R611	1-216-049-00	METAL CHIP	1K	5%	1/10W
R612	1-216-049-00	METAL CHIP	1K	5%	1/10W
R613	1-216-091-00	METAL CHIP	56K	5%	1/10W
R614	1-216-097-00	METAL CHIP	100K	5%	1/10W
R615	1-216-073-00	METAL CHIP	10K	5%	1/10W
R616	1-216-073-00	METAL CHIP	10K	5%	1/10W
R617	1-216-085-00	METAL CHIP	33K	5%	1/10W
R618	1-216-083-00	METAL CHIP	27K	5%	1/10W
R619	1-216-097-00	METAL CHIP	100K	5%	1/10W
R620	1-216-091-00	METAL CHIP	56K	5%	1/10W
R621	1-216-097-00	METAL CHIP	100K	5%	1/10W
R622	1-216-049-00	METAL CHIP	1K	5%	1/10W
R623	1-216-065-00	METAL CHIP	4.7K	5%	1/10W
R624	1-216-073-00	METAL CHIP	10K	5%	1/10W
R625	1-216-073-00	METAL CHIP	10K	5%	1/10W
R626	1-216-121-00	METAL CHIP	1M	5%	1/10W
R627	1-216-089-00	METAL CHIP	47K	5%	1/10W
R628	1-216-046-00	METAL CHIP	750	5%	1/10W
R629	1-216-035-00	METAL CHIP	270	5%	1/10W
R631	1-216-073-00	METAL CHIP	10K	5%	1/10W
R632	1-216-097-00	METAL CHIP	100K	5%	1/10W
R633	1-216-053-00	METAL CHIP	1.5K	5%	1/10W
R634	1-216-049-00	METAL CHIP	1K	5%	1/10W
R635	1-216-073-00	METAL CHIP	10K	5%	1/10W
R641	1-216-077-00	METAL CHIP	15K	5%	1/10W
RV101	1-230-325-11	RES, ADJ, CARBON 10K			
RV201	1-230-325-11	RES, ADJ, CARBON 10K			
RV301	1-230-327-11	RES, VAR, CARBON 10K/10K			
RV601	1-230-325-11	RES, ADJ, CARBON 10K			
S301	1-570-115-11	SWITCH, SLIDE (FUNCTION)			
S302	1-570-153-11	SWITCH, SLIDE (REC/PB)			
S303	1-554-671-21	SWITCH, SLIDE (BAND,DOLBY NR)			
S304	1-554-671-21	SWITCH, SLIDE (PAUSE)			
S305	1-570-114-11	SWITCH, SLIDE (FM SENS,FM MODE)			
S306	1-554-671-21	SWITCH, SLIDE (PB EQ)			
S307	1-570-113-11	SWITCH, SLIDE (ISS)			
S902	1-570-168-12	SWITCH, LEAF			
S903	1-554-586-00	SWITCH, LEAF			
T1	1-406-109-11	COIL (OSC)			
T2	1-404-525-11	TRANSFORMER, IF			
T301	1-433-251-00	TRANSFORMER, BIAS OSCILLATOR			

ACCESSORY & PACKING MATERIAL

Part No.	Description
1-542-071-11	MICROPHONE (C-3001)
3-317-536-00	PLATE, OPEN
3-320-443-01	BAG, PROTECTION
3-324-557-01	SPACER
3-324-560-01	(E).....CASE, ACCESSORY
3-324-582-01	(US,Canadian,AEP)...CASE, ACCESSORY
3-324-573-01	SHEET, PROTECTION
3-324-578-01	CUSHION
3-324-561-01	(E)....INDIVIDUAL CARTON
3-324-580-01	(US)...INDIVIDUAL CARTON
3-324-583-01	(AEP,Canadian)...INDIVIDUAL CARTON
3-527-213-00	LABEL, SERIAL NUMBER
3-701-613-00	BAG, POLYETHYLENE
3-703-910-01	(BLACK)....LABEL, COLOR
3-703-921-01	(SILVER)...LABEL, COLOR
3-703-912-01	(GOLD).....LABEL, COLOR
3-760-239-11	(AEP,E).....MANUAL, INSTRUCTION
3-760-239-21	(US,Canadian)...MANUAL, INSTRUCTION
3-760-239-31	(Canadian).....MANUAL, INSTRUCTION
3-760-239-41	(AEP).....MANUAL, INSTRUCTION
7-633-110-41	TAPE (50MMX500M)
8-951-093-90	(E;Silver,Black).....MDR-E242
8-952-220-90	(US,Canadian,AEP,E;Gold)...MDR-A20
X-3317-507-1	HOLSTER ASSY
X-3321-270-1	ATTACHMENT ASSY
X-3324-513-1	STAND ASSY, MICROPHONE

WM-F65 WM-F65

9-951-655-11

Sony Corporation

English
85E0480-1
Printed in Japan
© 1985

WM-F65

SERVICE MANUAL

SUPPLEMENT

File this supplement with the service manual.

Subject: Pinch roller part No. addition

US Model
Canadian Model
AEP Model
E Model

No. 1
November, 1985
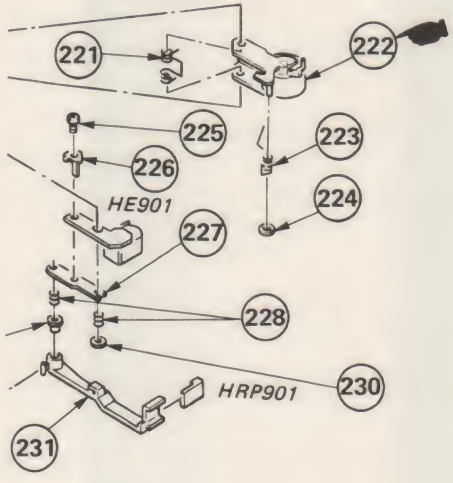
P29 222 X-3320-311-1 PINCH LEVER ASSY